Measurements of the magnetic field vector using multiple electromagnetically induced transparency resonances in Rb vapor

Kevin Cox,[1] Valery I. Yudin,[2,3,4] Alexey V. Taichenachev,[2,3,4] Irina Novikova,[1] and Eugeniy E. Mikhailov[1]
[1]*Department of Physics, College of William & Mary, Williamsburg, Virginia 23185, USA*
[2]*Institute of Laser Physics SB RAS, Novosibirsk RU-630090, Russia*
[3]*Novosibirsk State Technical University, Novosibirsk RU-630092, Russia*
[4]*Novosibirsk State University, Novosibirsk RU-630090, Russia*
(Received 1 November 2010; published 14 January 2011)

We study the dependence of electromagnetically induced transparency (EIT) resonance amplitudes on the external magnetic field direction in a linearly polarized bichromatic light ($lin||lin$) configuration in ^{87}Rb vapor. We demonstrate that all seven resolvable EIT resonances exhibit maxima or minima at certain orientations of the laser polarization relative to the wave vector and magnetic field. This effect can be used for the development of a high-precision EIT vector magnetometer.

DOI: 10.1103/PhysRevA.83.015801 PACS number(s): 42.50.Gy, 32.70.Jz, 32.60.+i, 07.55.Ge

The ability to measure magnetic fields with high precision and good spatial resolution benefits many applications. For example, the detection of weak magnetic field distributions gives a new noninvasive diagnostic method for heart and brain activities, allows identification of defects in magnetizable coatings and films, and can possibly be used for a non-demolishing readout of stored memory domains. Many magnetic sensors available today, such as superconducting quantum interference devices (SQUIDs) [1], spin-exchange relaxation-free (SERF) magnetometers [2,3], and various optical pumping magnetometers [4] are sensitive only to the magnitude of the magnetic field. These magnetometers lose valuable information about magnetic field direction and can allow reduced accuracy due to "heading error" in some systems [5].

The application of coherent optical effects, such as electromagnetically induced transparency (EIT) [6], for magnetic field detection offers an exciting perspective for the development of high-precision optical magnetometers [7–12]. EIT resonances are associated with the preparation of atoms into a coherent noninteracting (dark) superposition of two metastable states of an atom (such as two Zeeman or hyperfine sublevels of the electronic ground state of an alkali-metal atom) under the combined interaction of two optical fields $E_{0,1}$ in a two-photon Raman resonance in a Λ configuration. The resulting ultra-narrow (down to a few tens of Hz [13,14]) transmission peaks can be used to measure, for example, the frequency difference between two hyperfine energy levels in Rb or Cs without the use of microwave interrogation, making this method particularly attractive for the development of miniature atomic clocks [15,16] and magnetometers [10]. In the latter case, the magnitude of a magnetic field can be deduced from the spectral position of an EIT resonance in a Λ link formed between magnetic field-sensitive Zeeman sublevels. However, this method is not sensitive to the direction of the magnetic field vector $\vec{B}$.

Several publications suggested that the information about the direction of $\vec{B}$ can be extracted by analyzing relative intensities of various EIT peaks [17–19]. Linearly polarized light ($lin||lin$) EIT configuration is a promising candidate for EIT atomic clock applications [20–23]. Yudin *et al.* [19] showed that in this configuration the amplitudes of the magnetic-insensitive EIT resonance is sensitive to the magnetic field direction and has a universal maximum when the laser polarization vector $\vec{E}$ is orthogonal to the plane formed by the magnetic field $\vec{B}$ and laser wave vector $\vec{k}$. Thus, measuring the resonance amplitude while rotating the laser polarization should provide information about magnetic field direction. Moreover, since this effect is based only on fundamental symmetries of the problem, the measurement procedure does not require any assumptions regarding the details of the experimental arrangements (such as laser power and detuning).

In this Brief Report we explore the possibility of simultaneously measuring magnetic field magnitude and direction by recording both the spectral positions and relative amplitudes of multiple Zeeman-shifted EIT resonances that occur for a bichromatic linearly polarized laser field interacting with ^{87}Rb atomic vapor placed in an external uniform magnetic field. In this case, the EIT resonance conditions are fulfilled in various possible Λ systems formed between Zeeman sublevels of two hyperfine states of Rb atoms, shown in Fig. 1, for several two-photon detunings $\Delta_{\rm HFS} + n\mu_B g B$, where $n = 0,\pm1,\pm2,\pm3$, $\Delta_{\rm HFS}$ is the hyperfine splitting, g is the gyromagnetic ratio, and μ_B is the Bohr magneton. Other parameters of each EIT peak (amplitude, width) strongly depend on the mutual orientation of the magnetic field, light polarization, and wave-vector directions that define Rabi frequencies of optical fields for

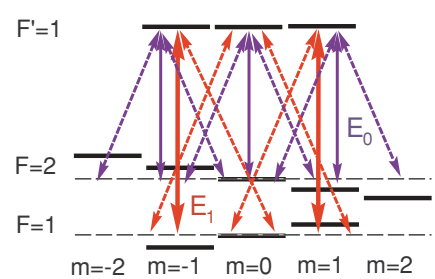

FIG. 1. (Color online) Possible EIT Λ systems for different magnetic field orientations: solid arrows show $\Delta m = 0$ transitions and dashed arrows show $\Delta m = \pm1$ transitions.

 ©2011 American Physical Society

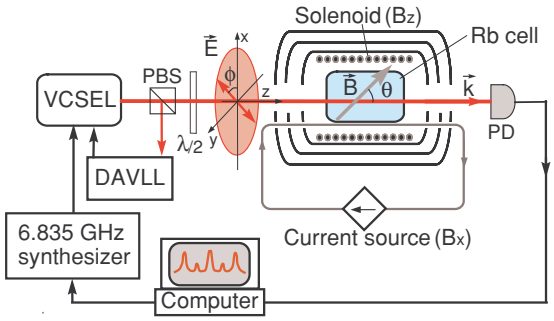

FIG. 2. (Color online) Schematic of the experimental setup. See text for abbreviations.

each Λ link according to the selection rules. However, a universal intrinsic symmetry of this problem [19] predicts that all EIT resonance amplitudes must exhibit local maxima or minima for two orientations of the light polarization $\vec{E}$: when $\vec{E}$ is orthogonal to the $\vec{B}$-$\vec{k}$ plane, and when it lies within that plane. Here we confirm (both experimentally and by using exact numerical calculations) that such universal extrema exist for all observed EIT resonances, even though their characteristic strengths (maximum vs. minimum) change depending on the direction of the magnetic field. Since the exact angular positions of such extrema [19] do not depend on parameters of the laser (such as laser intensity), they should provide accurate information about magnetic field orientation.

Our experimental arrangements (see Fig. 2) are similar to those used for miniature EIT-based magnetometers [10] (although most components are not miniaturized). The details of the construction and operation of our experimental apparatus are given in [23,24]. A temperature-stabilized vertical-cavity surface-emitting diode laser (VCSEL) was current-modulated at $\nu_m = 6.8347$ GHz with the laser carrier frequency tuned at the $5S_{1/2}F = 2 \rightarrow 5P_{1/2}F' = 1$ transition and the first modulation sideband resonant with the $5S_{1/2}F = 1 \rightarrow 5P_{1/2}F' = 1$ transition (see Fig. 1) using a dichroic-atomic-vapor laser lock (DAVLL) [25]. The intensity ratio between the sideband and the carrier was adjusted by changing the modulation power sent to the VCSEL while the modulation frequency (and consequently the two-photon detuning of the two EIT fields) was controlled by a home-made computer-controlled microwave source operating at 6.835 GHz [23]. During this experiment we kept the sideband-to-carrier ratio equal to 60% since this allows us to cancel the first-order power shift in the setup [22,23]. The laser beam with maximum total power 120 μW and a slightly elliptical Gaussian profile [1.8 mm and 1.4 mm full width half maximum (FWHM)] traverses a cylindrical Pyrex cell (length 75 mm, diameter 22 mm) containing isotopically enriched ^{87}Rb vapor and 15 Torr of Ne buffer gas mounted inside a three-layer magnetic shielding and actively temperature stabilized at 47.3 °C. To control the polarization of the laser before the cell, the beam passes a polarizing beam splitter (PBS) and then a half-waveplate ($\lambda/2$) that rotates the direction of polarization in the x-y plane. The polarization angle ϕ is defined as the angle between the polarization direction and a vertical x axis.

A solenoid inside the magnetic shield produces a magnetic field B_z parallel to $\vec{k}$, while a straight wire parallel to the light propagation direction produces a transverse component B_x. Special care was taken to align the laser beam strictly parallel to the B_x-generating wire to avoid variations of the B field along the beam-propagation direction. Calibrated, simultaneous adjustment of current in both the solenoid and the wire allowed us to change the direction of the magnetic field angle θ (measured from the z axis) without changing the magnitude of B and the associated 26-kHz Zeeman splitting.

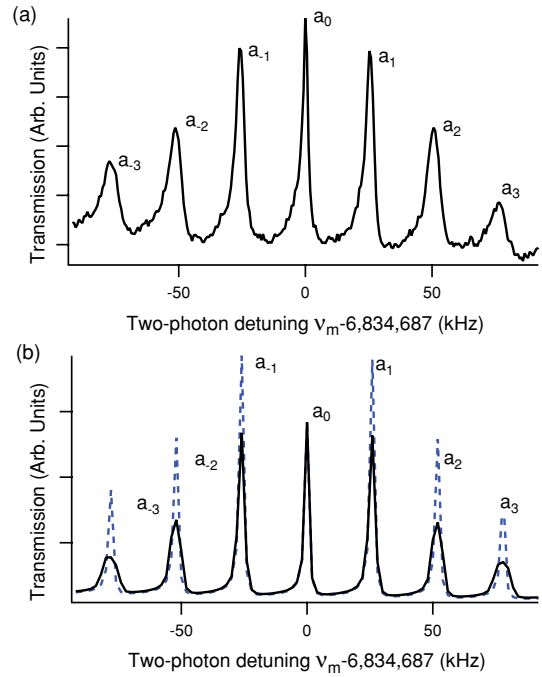

FIG. 3. (Color online) (a) Sample experimental EIT resonances for $\theta = 90°$ and $\phi = 60°$ with angles defined in Fig. 2. (b) Matching theoretical calculations for a perfectly homogeneous magnetic field (dashed line) and taking into account the transverse gradient from the wire (solid line).

During experiments, for given angles θ and ϕ, we recorded laser field transmission as a function of two-photon detuning by scanning the laser's microwave modulation frequency ν_m around the ^{87}Rb hyperfine splitting. A sample spectrum [Fig. 3(a)] shows seven EIT peaks that are labeled according to their Zeeman shift: the magneto-insensitive peak at $\nu_m = \Delta_{\rm HFS}$ is labeled a_0, while peaks separated by $\pm$ one, two, and three Zeeman splittings are $a_{\pm 1}$, $a_{\pm 2}$, and $a_{\pm 3}$ respectively. The amplitudes of each EIT peak were extracted from the Lorentzian fit and then normalized to the maximum a_0 amplitude for each angle θ.

Our experimental results are supported by numerical calculations for complete hyperfine and Zeeman structure of Rb atoms based on the standard density-matrix approach (see, e.g., Ref. [26]) under assumptions of low saturation and total collisional depolarization of the excited state. The parameters used in the calculations matched the experimental conditions: total intensity of the two fields $I_1 + I_0 = 0.5$ mW/cm^2 and $I_1/I_0 = 0.6$, pressure-broadened optical transition linewidth $\gamma = 100$ MHz [14], ground-state decoherence rate $\gamma_0 = 500$ Hz, and Zeeman splitting $\mu_B g B = 26$ kHz.

Figure 3(b) shows a calculated EIT spectrum. To achieve good agreement with the experiment we took into account

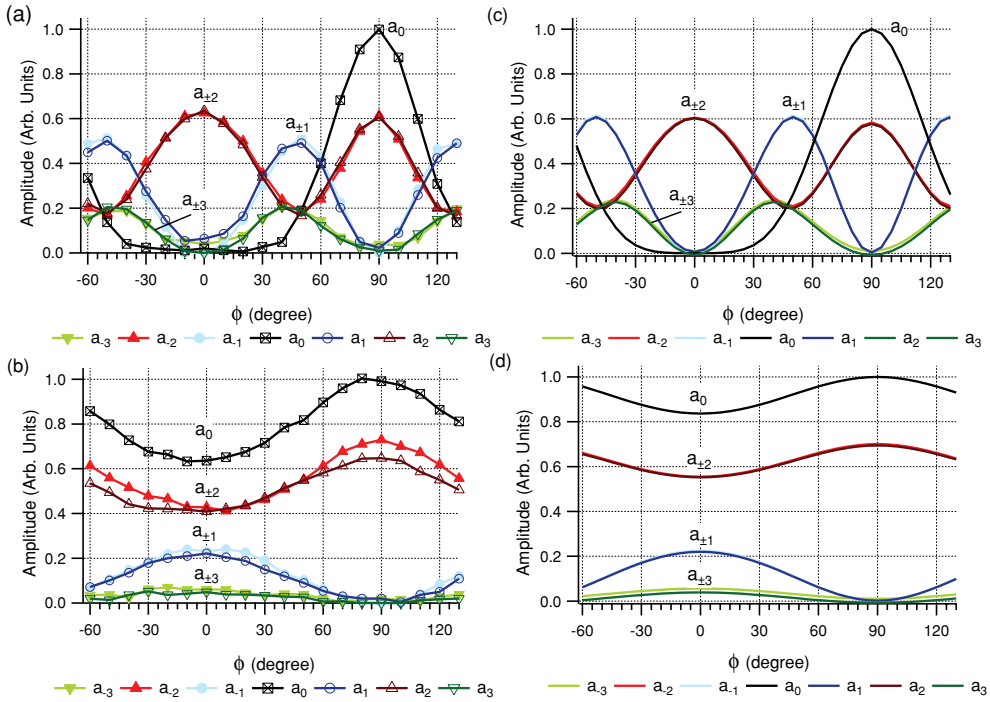

FIG. 4. (Color online) Experimental (a), (b) and theoretical (c), (d) dependence of the EIT resonance amplitudes on polarization angle ϕ for magnetic field angles $\theta = 90^\circ$ (top row) and $\theta = 15^\circ$ (bottom row).

a transverse magnetic field gradient created by the straight wire that was characterized experimentally in our previous work [27]. Such variation of the magnetic field produced small differential shifts of the EIT resonance positions across the laser beam cross-section that resulted in broadening of the magneto-sensitive peaks and a change in their relative amplitudes. This effect was taken into account in numerical calculations by averaging the results over a 25-point rectangular grid across the beam.

Figure 4 shows both experimental data and theoretical calculations for the amplitudes of all seven EIT resonances as functions of laser polarization angle ϕ for two different angles θ. The strongest dependencies on light polarization were observed for mostly transverse magnetic fields $\vec{B} \perp \vec{k}$ [see Figs. 4(a) and 4(c)]. According to the selection rules, only optical transitions with $\Delta m_F = 0$ are possible for $\vec{B}||\vec{E}$ ($\phi = 0^\circ$ and $\theta = 90^\circ$). Thus, only a_{-2} and a_2 EIT resonances appear at the two-photon detunings $\Delta_{\mathrm{HFS}} \pm 2g\mu_B B$ (transition $F = 1$, $m_F = 0 \rightarrow F' = 1$, $m_F = 0$ is forbidden due to symmetry); all other EIT peaks vanish. Similarly, at $(\vec{B} \perp \vec{k}) \perp \vec{E}$ ($\phi = 90^\circ$ and $\theta = 90^\circ$), only transitions with $\Delta m_F = \pm 1$ are allowed, resulting in only three EIT resonances at Δ_{HFS} and $\Delta_{\mathrm{HFS}} \pm 2g\mu_B B$. At any other intermediate angle, the same two Zeeman sublevels can participate in more than one Λ system, resulting in constructive or detractive interference depending on their Clebsch-Gordan coefficients. This makes calculations of EIT resonance amplitudes more complicated. Furthermore, when there is a significant longitudinal component of the magnetic field present, the amplitude of EIT resonances becomes less sensitive to the light polarization, as shown in Figs. 4(c) and 4(d). However, there are still clear extrema at $\phi = 0$ and $\phi = 90^\circ$ for all EIT resonances. We experimentally observed this to be true for any direction of the magnetic field. The only exception is for a longitudinal magnetic field ($\vec{B}||\vec{k}$) since, as expected, no polarization dependence was observed.

In the ideally symmetric situation, the amplitudes of resonances with the same value but opposite detunings (e.g., a_1 and a_{-1}) should be identical. However, the complex hyperfine and Zeeman structure of the excited state causes a slight asymmetry of EIT resonances (see Fig. 3) for nominal zero optical (one-photon) detunings. Combined with a relatively small (compared to the resonance linewidth) Zeeman shift, this asymmetry leads to a small difference in resonance amplitudes for "positive" and "negative" peaks, which is more noticeable in our experiment for small angles θ [see Fig. 4(b)]. The resonance asymmetry can be reduced by optimizing the laser detuning [22] and by operating at higher magnetic fields.

Measuring extrema positions of resonance amplitudes versus light-polarization–rotation-angle dependence allows one to find the plane in which the magnetic field vector lies. For a complete measurement of magnetic field direction, one must take two independent measurements of two such planes and then determine the direction of $\vec{B}$ from their intersect. This can be done, for example, by repeating the measurement for two different light propagation directions in the x-z plane [19]. Alternatively, an additional magnetic field of known magnitude and direction could be used to controllably "rotate" the total magnetic field for the second measurement. It may also be possible to extract complete information about magnetic field vector by analyzing the exact dependence of EIT resonances' amplitudes (such as the curves shown in Fig. 4), which are unique functions of magnetic angle θ. However, other experimental parameters (such as

laser intensity, beam size, atomic density, buffer gas pressure, etc.) have to be well characterized since they also affect the resonance dependence on polarization angle. Finally, in the ideal case, the symmetry of the problem does not allow one to distinguish between magnetic fields directed at angles θ and $\pi - \theta$ with respect to the z axis. This degeneracy, however, can be lifted by introducing a small ellipticity to the light polarization that unbalances the amplitudes of "positive" and "negative" resonance amplitudes depending on the magnetic field direction.

This measurement procedure can also be used to produce high-resolution maps of vector magnetic fields when used in combination with a recently demonstrated magnetic field imager [27] as long as light transmission across the laser beam is spatially resolved. Since the EIT resonance positions depend on the Zeeman shifts of atomic sublevels, the resonances will occur at different two-photon detunings for different spacial locations in the case of a spatially varying magnetic field. Recording a series of such images for various two-photon frequencies for a particular EIT resonance can create a spatial map of the magnetic field magnitude. Repeating such measurements for several orientations of the laser polarization and finding the extrema in resonance amplitude provides additional information about variations in the direction of the magnetic field.

In summary, we systematically studied dependence of multiple EIT resonances on relative orientation of magnetic field and laser polarization in the $lin||lin$ configuration using a current-modulated VCSEL on the D_1 line of ^{87}Rb. We demonstrate that all observed EIT resonances can be used to extract complete information about the magnetic field vector with improved sensitivity to directionality. These findings can be used to implement a sensitive small-scale vector magnetometer and/or magnetic field imager with good spatial resolution.

The authors would like to thank S. Zibrov, A. S. Zibrov and V. L. Velichansky for useful discussions. This research was supported by the National Science Foundation grant PHY-0758010. A.V.T and V.I.Yu. were supported by RFBR (Grants 09-02-01151, 10-02-00406, 11-02-00775, 11-02-00786, 11-02-01240), DFG/RFBR (Grant 10-02-91335), Russian Academy of Science, Presidium SB RAS, and by federal program "Scientific and pedagogic personnel of innovative Russia 2009–2013." K.C. acknowledges support from the Virginia Space Grant Consortium through the Undergraduate Research Scholarship.

[1] J. Clarke, in *SQUID Sensors: Fundamentals, Fabrication, and Applications*, edited by H. Weinstock (Kluwer Academic, The Netherlands, 1996), pp. 1–62.
[2] I. K. Kominis, T. W. Kornack, J. C. Allred, and M. V. Romalis, Nature (London) **422**, 596 (2003).
[3] D. Budker and M. V. Romalis, Nature Phys. **3**, 227 (2007).
[4] E. B. Alexandrov and V. A. Bonch-Bruevich, Opt. Eng. **31**, 711 (1992).
[5] J. E. Lenz, Proc. IEEE **78**, 973 (1990).
[6] M. Fleischhauer, A. Imamoglu, and J. P. Marangos, Rev. Mod. Phys. **77**, 633 (2005).
[7] M. Fleischhauer and M. O. Scully, Phys. Rev. A **49**, 1973 (1994).
[8] C. Affolderbach, M. Stähler, S. Knappe, and R. Wynands, Appl. Phys. B **75**, 605 (2002).
[9] H. Xia, A. Ben-Amar, D. Hoffman, and M. V. Romalis, Appl. Phys. Lett. **89**, 211104 (2006).
[10] V. Shah, S. Knappe, P. D. D. Schwindt, and J. Kitching, Nature Photonics **1**, 649 (2007).
[11] M. P. Ledbetter, I. M. Savukov, D. Budker, V. Shah, S. Knappe, J. Kitching, D. J. Michalak, S. Xu, and A. Pines, Proc. Nat. Acad. Sci. USA **105**, 2286 (2008).
[12] G. Bison, N. Castagna, A. Hofer, P. Knowles, J.-L. Schenker, and A. Weis, Appl. Phys. Lett. **95**, 173701 (2009).
[13] D. Budker, V. Yashchuk, and M. Zolotorev, Phys. Rev. Lett. **81**, 5788 (1998).
[14] M. Erhard and H. Helm, Phys. Rev. A **63**, 043813 (2001).
[15] J. Vanier, Appl. Phys. B **81**, 421 (2005).
[16] S. Knappe, P. D. D. Schwindt, V. Shah, L. Hollberg, J. Kitching, L. Liew, and J. Moreland, Opt. Express **13**, 1249 (2005).
[17] R. Wynands, A. Nagel, S. Brandt, D. Meschede, and A. Weis, Phys. Rev. A **58**, 196 (1998).
[18] H. Lee, M. Fleischhauer, and M. O. Scully, Phys. Rev. A **58**, 2587 (1998).
[19] V. I. Yudin, A. V. Taichenachev, Y. O. Dudin, V. L. Velichansky, A. S. Zibrov, and S. A. Zibrov, Phys. Rev. A **82**, 033807 (2010).
[20] A. V. Taichenachev, V. I. Yudin, V. L. Velichansky, and S. A. Zibrov, JETP Lett. **82**, 398 (2005).
[21] E. Breschi, G. Kazakov, R. Lammegger, G. Mileti, B. Matisov, and L. Windholz, Phys. Rev. A **79**, 063837 (2009).
[22] S. A. Zibrov, I. Novikova, D. F. Phillips, R. L. Walsworth, A. S. Zibrov, V. L. Velichansky, A. V. Taichenachev, and V. I. Yudin, Phys. Rev. A **81**, 013833 (2010).
[23] E. E. Mikhailov, T. Horrom, N. Belcher, and I. Novikova, J. Am. Opt. Soc. B **27**, 417 (2010).
[24] N. Belcher, E. E. Mikhailov, and I. Novikova, Am. J. Phys. **77**, 988 (2009).
[25] V. V. Yashchuk, D. Budker, and J. R. Davis, Rev. Sci. Instrum. **71**, 341 (2000).
[26] A. V. Taichenachev, V. I. Yudin, R. Wynands, M. Stahler, J. Kitching, and L. Hollberg, Phys. Rev. A **67**, 033810 (2003).
[27] E. E. Mikhailov, I. Novikova, M. D. Havey, and F. A. Narducci, Opt. Lett. **34**, 3529 (2009).